AMETEK®
ULTRA PRECISION TECHNOLOGIES

Solartron Metrology
Precision Driven

Analogue Gauging

Solartron Analogue Contact Gauging Sensors provide a cost effective solution over a wide range of industrial and laboratory measurement applications.

The standard analogue gauging sensors utilize precision linear bearings and an anti-rotation mechanism to ensure long life. Measurement ranges are from +/-0.25 to +/- 10 mm. For applications with harder to reach features, Solartron offers a variety of compact and small diameter sensors, along with specialized probes such as Block gauges and Flexures. The sensors can also be customized with Right Angle outlets and steel braided cables.

Built in the UK with state of the art equipment and an attention to detail, Solartron gauging sensors have a rugged build that maintains high resolution through tens of millions of cycles. Users consider them an investment, not a cost.

- Spring push, pneumatic or vacuum retract
- Specialist sensors with parallel guiding – Block and Flexures
- Precision linear bearings
- Wide offering of measurement ranges
- Linearity better than 0.5% of reading
- Repeatability of 0.15 µm
- Available in 6 mm and 8 mm body diameter.

Precision. Quality. Reliability

www.solartronmetrology.com • sales.solartronmetrology@ametek.com

EDCR number: 21775 Issue number: 15/04 Datasheet number: 503192

AMETEK®
ULTRA PRECISION TECHNOLOGIES

Solartron Metrology
Precision Driven

Gauging Probes: Spring push

Standard - AX

The Standard AX range of Spring Push Probes has justifiably become the workhorse of the gauging industry. Excellent linearity and repeatability, long life precision bearings, and an IP65 rating ensure that probes maintain their performance for millions of cycles.

- Rugged design with IP 65 rating
- 0.7 N Tip force
- ±1, ±2.5, ±5, ±10 mm ranges
- Tested to 13 million cycles
- Excellent linearity and repeatability

Vacuum retract

The vacuum retract probe allows the number of moving parts in a fixture to be reduced, resulting in improved reliability and reduced fixture costs. It also enables fast and safe automatic loading of the component into a gauge when required.

- Rugged design with IP 65 rating
- 0.7 N Tip force
- ±1, ±2.5, ±5, ±10 mm ranges
- Tested to 13 million cycles
- Excellent linearity and repeatability

Feather Touch – AT

With very low tip forces, touch probes are ideal for the gauging of delicate high precision components.
Long life bearings ensure that the performance of the probes are maintained through millions of cycles in industries producing high volumes of components on short cycle times.

- As low as 0.18 N Tip force
- Ideal for glass, electronics, and delicate surfaces
- ±1, ±2.5, ±5, ±10 mm ranges
- Nylon and ruby tips available

Ultra Feather Touch - AW

Ultra Light probes are similar to Feather Touch probes except they have a significantly lower moving mass and are capable of tip forces as low as 0.03N.

- Low 0.03 to 0.06 N tip force
- Ideal for delicate surfaces
- ±5 mm range
- Not ideal for side load applications

www.solartronmetrology.com • sales.solartronmetrology@ametek.com

EDCR number: 21775 Issue number: 15/04 Datasheet number: 503192

AMETEK®
ULTRA PRECISION TECHNOLOGIES

Solartron Metrology
Precision Driven

Spring Push	LVDT	HB	LVDT	HB	LVDT	HB	LVDT	HB
Axial Cable Outlet : Standard Spring	A6G/1/S	A6G/1/SH	-	-	AX/0.5/S	AX/0.5/SH	AX/1/S	AX/1/SH
Vacuum	-	-	-	-	-	-	AX/1/V	AX/1/VH
Feather Touch	-	-	-	-	AT/0.5/S	AT/0.5/SH	AT/1/S	AT/1/SH
Ultra feather Touch	-	-	-	-	-	-	-	-
Radial Cable Outlet : Standard Spring	-	-	AXR/0.25/S	AXR/0.25/SH	AXR/0.5/S	AXR/0.5/SH	AXR/1/S	AXR/1/SH
Vacuum	-	-	-	-	-	-	AXR/1/V	AXR/1/VH
Feather Touch	-	-	-	-	-	-	ATR/1/S	ATR/1/SH
Ultra feather Touch	-	-	-	-	-	-	-	-
Measurement Performance								
Measurement Range (mm)	±1		±0.25		±0.5		±1	
Accuracy (% of reading or µm) ***1***			0.5 or 0.5 µm		0.5 or 0.5 µm		0.5 or 1 µm	
Repeatability (µm) ***2***	0.15		0.1		0.15		0.15	
Resolution	Dependent on associated electronics							
Pre-Travel (mm)	0.15		0.03		0.15		0.15	
Post-Travel (mm)	0.35		0.05		0.35		0.85	
Tip Force (N) at Middle of Range (±20%)								
Spring Push Standard/Vacuum	0.7		0.7		0.7		0.7	
Spring Push Feather Touch	-		-		0.4		0.3	
Spring Push Ultra Feather Touch	-		-		-		-	
Temperature Coefficient %FS/˚C			0.03		0.03		0.01	
Electrical Interface								
Energising Voltage	1 to 10 Vrms							
Energising Current (mA/V ± 5%)	3	1.2	3	1.2	2.2	1.2	1.8	1
Sensitivity (mV/V/mm± 5%) Plugged	200	73.5	200	73.5	200	73.5	200	73.5
Sensitivity (mV/V/mm± 5%) Unplugged	269	88	262	82	262	82	210	83
Mechanical								
Body Diameter (mm)	6h6		8h6					
Case	Stainless Steel							
Probe Tip (options)	Nylon, Ruby, Silicon Nitride, Tungsten Carbide							
Gaiter	Fluoroelastomer or Silicon							
Cable	PUR							
Environmental								
Sealing For Probe	IP65 with gaiter or IP50 without gaiter							
Storage Temp (˚C)	-20 to +70							
Operating Temp With Gaiter (˚C)	+5 to +80							
Operating Temp Without Gaiter (˚C)	-10 to +80							

1: Accuracy µm or % reading, whichever is the greater
2: Obtained by repeated operation against a tungsten carbide target

AMETEK®
ULTRA PRECISION TECHNOLOGIES

Solartron Metrology
Precision Driven

Spring Push	LVDT	HB	LVDT	HB	LVDT	HB	LVDT	HB
Axial Cable Outlet : Standard Spring Vacuum Feather Touch Ultra feather Touch	AX5/1/S AX5/1/V - -	AX5/1/SH AX5/1/VH - -	AX/1.5/S AX/1.5/V AT/1.5/S -	AX/1.5/SH AX/1.5/VH AT/1.5 /SH -	AX/2/S AX/2/V AT/2/V -	AX/2/SH AX/2/VH AT/2/SH -	AX5/2/S - - -	AX5/2/SH - - -
Radial Cable Outlet : Standard Spring Vacuum Feather Touch Ultra feather Touch	AXR5/1/S AXR5/1/V - -	AXR5/1/S AXR5/1/VH - -	AXR/1.5/S AXR/1.5/V ATR/1.5/S -	AXR/1.5/SH AXR/1.5/SH ATR/1.5 /SH -	AXR/2/S - - -	AXR/2/SH - - -	AXR5/2/S - - -	AXR5/2/SH - - -
Measurement Performance								
Measurement Range (mm)	±1		±1.5		±2		±2	
Accuracy (% of reading or µm) ***1***	0.5 or 1.5 µm		0.5 or 1.0 µm		0.5 or 2.5 µm		0.5 or 2.0 µm	
Repeatability (µm) ***2***	0.15		0.15		0.15		0.15	
Resolution	Dependent on associated electronics							
Pre-Travel (mm)	0.15		0.15		0.15		0.15	
Post-Travel (mm)	8.85		0.85		1.35		9.85	
Tip Force (N) at Middle of Range (±20%) Spring Push Standard/Vacuum Spring Push Feather Touch Spring Push Ultra Feather Touch	0.7 0.3 -		0.7 0.3 -		0.7 - -		0.7 - -	
Temperature Coefficient %FS/˚C	0.01		0.01		0.01		0.01	
Electrical Interface								
Energising Voltage	1 to 10 Vrms							
Energising Current (mA/V ± 5%)	1.8	1	2	1	2	1	2	1
Sensitivity (mV/V/mm± 5%) Plugged	200	73.5	133	49	80	29.4	80	29.4
Sensitivity (mV/V/mm± 5%) Unplugged	210	83	150	82	150	82	150	82
Mechanical								
Body Diameter (mm)	8h6							
Case	Stainless Steel							
Probe Tip (options)	Nylon, Ruby, Silicon Nitride, Tungsten Carbide							
Gaiter	Fluoroelastomer or Silicon							
Cable	PUR							
Environmental								
Sealing For Probe	IP65 with gaiter or IP50 without gaiter							
Storage Temp (˚C)	-20 to +70							
Operating Temp With Gaiter (˚C)	+5 to +80							
Operating Temp Without Gaiter (˚C)	-10 to +80							

1: Accuracy µm or % reading, whichever is the greater
2: Obtained by repeated operation against a tungsten carbide target

AMETEK®
ULTRA PRECISION TECHNOLOGIES

Solartron Metrology
Precision Driven

Spring Push	LVDT	HB	LVDT	HB	LVDT	HB
Axial Cable Outlet : Standard Spring Vacuum Feather Touch Ultra feather Touch	AX/2.5/S AX/2.5/V AT/2.5/S -	AX/2.5/SH AX/2.5/VH AT/2.5/SH -	AX/5/S AX/5/V AT/5/S AW/5/S	AX/5/SH AX/5/VH AT/S/SH AW/5/SH	AX/10/S AX/10/V AT/10/S -	AX/10/SH AX/10/VH AT/10/SH -
Radial Cable Outlet : Standard Spring Vacuum Feather Touch Ultra feather Touch	AXR/2.5/S AXR/2.5/V ATR/2.5/S -	AXR/2.5/SH AXR/2.5/VH ATR/2.5/SH -	AXR/5/S AXR/5/V ATR/5/S AW/5/S	AXR/5/SH AXR/5/VH ATR/S/SH AW/5/SH	AXR/10/S AXR/10/V ATR/10/S -	AXR/10/SH AXR/10/VH ATR/10/SH -
Measurement Performance						
Measurement Range (mm)	±2.5		±5		±10	
Accuracy (% of reading or µm) ***1***	0.5 or 2.5 µm		0.5 or 5 µm		0.7 or 10 µm	
Repeatability (µm) ***2***	0.15		0.15		0.25	
Resolution	Dependent on associated electronics					
Pre-Travel (mm)	0.15		0.15		0.15	
Post-Travel (mm)	0.85		0.85		0.85	
Tip Force (N) at Middle of Range (±20%) Spring Push Standard/Vacuum Spring Push Feather Touch Spring Push Ultra Feather Touch	 0.7 0.3 -		 0.7 0.3 0.06		 0.7 0.3 -	
Temperature Coefficient %FS/˚C	0.01		0.01		0.01	
Electrical Interface						
Energising Voltage	1 to 10 Vrms					
Energising Current (mA/V ± 5%)	2	1	2	1.2	1	1.2
Sensitivity (mV/V/mm± 5%) Plugged	80	29.4	40	14.7	20	7.35
Sensitivity (mV/V/mm± 5%) Unplugged	150	82	105	51	33	33
Mechanical						
Body Diameter (mm)	8h6					
Case:	Stainless Steel					
Probe Tip (options)	Nylon, Ruby, Silicon Nitride, Tungsten Carbide					
Gaiter	Fluoroelastomer or Silicon					
Cable:	PUR					
Environmental						
Sealing For Probe	IP65 with gaiter or IP50 without gaiter					
Storage Temp (˚C)	-20 to +70					
Operating Temp With Gaiter (˚C)	+5 to +80					
Operating Temp Without Gaiter (˚C)	-10 to +80					

1: Accuracy µm or % reading, whichever is the greater
2: Obtained by repeated operation against a tungsten carbide target

Dimensions

Special Spring Push Probes

Ultra Small (AX0.25/S)

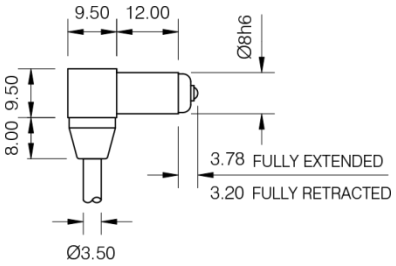

Ultra Short (AX/0.5/S)

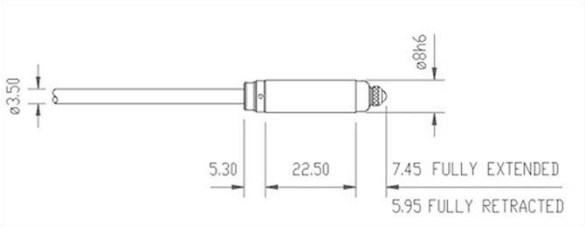

Standard Spring Push Axial (AX/S)

	AX/1/S	AX/1.5/S	AX5/1/S	AX/2/S	AX5/2/S	AX/2.5/S	AX/5/S	AX/10/S
A	43.00	58.00	75.00	53.00	*	63.00	87.00	127.00
C	3.5	4.00	4.00	3.50	*	4.00	4.00	3.00
B1	13.9	15.40	25.40	15.65	*	17.40	25.40	44.90
B2	11.4	11.40	14.40	10.65	*	11.40	14.40	23.90

* Dimensions available upon request

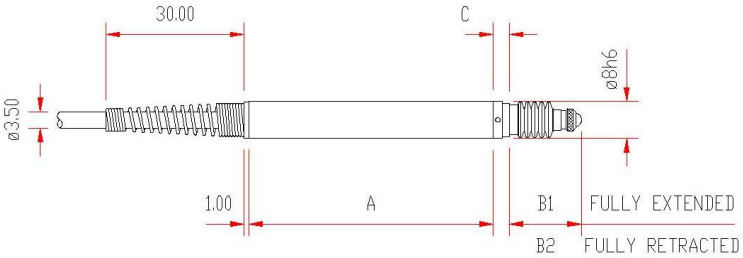

Spring Push Right Angle (AXR/S)

	AXR/1/S	AXR/1.5/S	AXR5/1/S	AXR/2/S	AXR5/2/S	AXR/2.5/S	AXR/5/S	AXR/10/S
A	29.50	44.50	*	*	*	49.50	73.50	113.50
C	3.50	4.00	*	*	*	4.00	4.00	3.00
B1	13.90	15.40	*	*	*	17.40	25.40	33.90
B2	11.40	11.40	*	*	*	11.40	14.40	12.90

* Dimensions available upon request

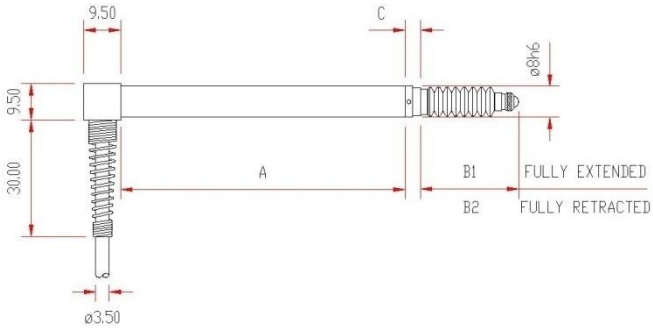

Feather Touch Spring Push (AT/S)

	AT/1/S	AT5/1/S	AT/1.5/S	AT/2.5/S	AT/2/S	AT5/2/S	AT/5/S	AT/10/S
A	43.00	*	58.00	63.00	*	*	87.00	127.00
C	3.50	*	4.00	4.00	*	*	4.00	3.00
B1	13.90	*	15.40	17.40	*	*	25.40	33.90
B2	11.40	*	11.40	11.40	*	*	14.40	12.90

* Dimensions available upon request

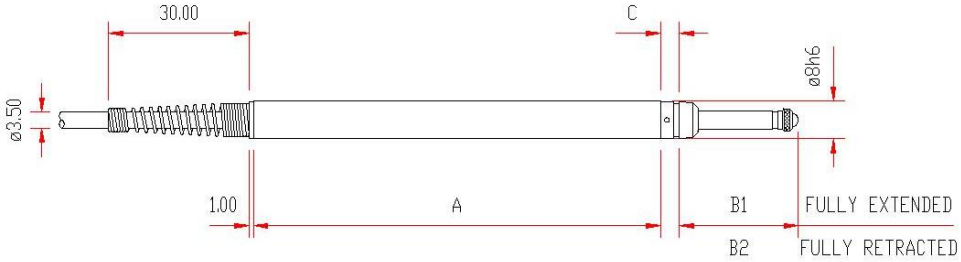

Right Angle Feather Touch Spring Push with braided cable (ATR/S)

	ATR/1/S	ATR5/1/S	ATR/1.5/S	ATR/2/S	ATR5/2/S	ATR/2.5/S	ATR/5/S	ATR/10/S
A	29.50	*	44.50	*	*	49.50	73.50	113.50
C	3.50	*	4.00	*	*	4.00	4.00	3.00
B1	13.90	*	15.40	*	*	17.40	25.40	33.90
B2	11.40	*	11.40	*	*	11.40	14.40	12.90

* Dimensions available upon request

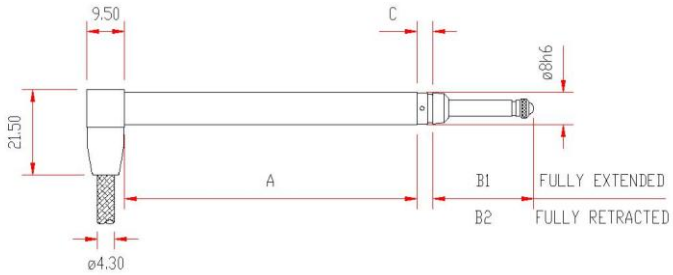

Vacuum Retract (AX/V)

	AX/1/V	AX/5/1/V	AX/1.5/V	AX/2/V	AX5/2/V	AX/2.5/V	AX/5/V	AX/10/V
A	43.00	84.00	58.00	*	*	63.00	87.00	127.00
C	3.50	4.00	4.00	*	*	4.00	4.00	3.00
B1	13.90	25.40	15.40	*	*	17.40	25.40	44.90
B2	11.40	14.40	11.40	*	*	11.40	14.40	23.90

* Dimensions available upon request

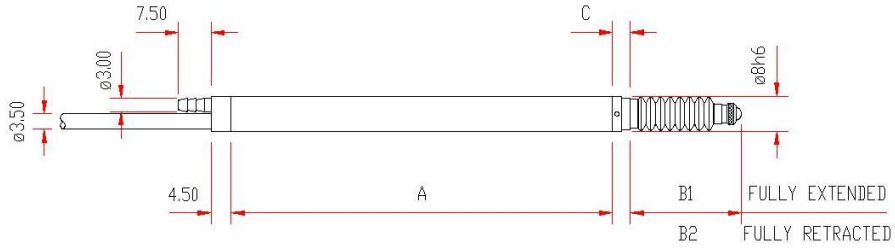

AMETEK®
ULTRA PRECISION TECHNOLOGIES

Solartron Metrology
Precision Driven

Gauging Probes: Pneumatic Push

Standard - AX

The Standard range of Pneumatic Probes comes with an IP65 rating to ensure a long working life in wet or oily environments.
In order to ensure the probe is totally sealed to IP65, actuation is achieved by pressurising the gaiter.

- Rugged design with IP65 rating
- 0.7 N Tip force
- ±1, ±2.5, ±5, ±10 mm ranges
- Tested to 13 million cycles
- Excellent linearity and repeatability

J Type

J Type probes are similar to Standard Pneumatic Probes except that actuation is by an inbuilt piston.
High tip forces are available as air is vented through a port close to the front of the probe.

- Actuation by inbuilt piston, independent of gaiter. Air exits via side port
- ±1, ±2.5, ±5, ±10 mm ranges
- No IP rating

Feather Touch – AT

Feather Touch Probes are designed specifically for applications where low tip forces are critical. Air is vented through the shroud at the front of the probe during actuation, which in turn cleans the bearing. With no gaiter to protect the shaft from contamination, they are unsuitable for use in wet or oily conditions.

- As low as 0.18 N Tip force
- Ideal for glass, electronics, and delicate surfaces
- ±1, ±2.5, ±5, ±10 mm ranges
- Nylon and ruby tips available

Ultra Feather Touch - AW

Ultra Light probes are similar to Feather Touch probes except they have a significantly lower moving mass and are capable of tip forces as low as 0.03N

- Low 0.03 to 0.06 N tip force
- Ideal for delicate surfaces
- ±5 mm range
- Available in both spring and pneumatic

AMETEK®
ULTRA PRECISION TECHNOLOGIES

Solartron Metrology
Precision Driven

Pneumatic Push	LVDT	HB	LVDT	HB	LVDT	HB	LVDT	HB
Axial Cable Outlet : Standard Pneumatic Jet Pneumatic Feather Touch Ultra feather Touch	AX/1/P AJ/1/P AT/1/P -	AX/1/PH AJ/1/PH AT/1/PH -	AX5/1/P AJ5/1/P AT5/1/P -	AX5/1/PH AJ5/1/PH AT5/1 /PH -	AX/1.5/P AJ/1.5/P AT/1.5/P -	AX/1.5/PH AJ/1.5/PH AT/1.5 /PH -	AX/2/P - - -	AX/2/PH - - -
Radial Cable Outlet: Standard Pneumatic Jet Pneumatic Feather Touch Ultra feather Touch	AXR/1/P AJR/1/P ATR/1/P -	AXR/1/PH AJR/1/PH ATR/1/SH -	AXR5/1/P AJR5/1/P ATR5/1/P -	AXR5/1/PH AJR5/1/PH ATR5/1 /SP -	AXR/1.5/P AJR/1.5/P ATR/1.5/P -	AXR/1.5/PH AJR/1.5/PH ATR/1.5 /PH -	AXR/2/P - - -	AXR/2/PH - - -
Measurement Performance								
Measurement Range (mm)	±1		±1		±1.5		±2	
Accuracy (% of reading or µm) ***1***	0.5 or 1 µm		0.5 or 1.0 µm		0.5 or 1.5 µm		0.5 or 2 µm	
Repeatability (µm) ***2***	0.15		0.15		0.15		0.15	
Resolution	Dependent on associated electronics							
Pre-Travel (mm)	0.15		0.15		0.15		0.15	
Post-Travel (mm)	0.85		8.85		0.85		1.35	
Tip Force (N) at Middle of range ± 20 % Pneumatic at 0.4 Bar Pneumatic at 1 Bar Pneumatic Jet Pneumatic Feather Touch ± 30% at 0.3 Bar Pneumatic Feather Touch ± 30% at 0.1 Bar Pneumatic Ultra Feather Touch ± 30% at 0.4 Bar	0.7 2.6 0.85 0.18 1.1 -		0.7 2.6 0.85 0.18 1.1 -		0.7 2.6 0.85 0.18 1.1 -		0.7 2.6 - - - -	
Temperature Coefficient %FS/˚C	0.01		0.01		0.01			
Electrical Interface								
Energising Voltage	1 to 10 Vrms							
Energising Current (mA/V ± 5%)	1.8	1	1.8	1	2	1	2	1
Sensitivity (mV/V/mm± 5%) Plugged	200	73.5	200	73.5	133	49	80	29.4
Sensitivity (mV/V/mm± 5%) Unplugged	210	83	210	83	150	82	150	82
Mechanical								
Body Diameter (mm)	8h6							
Case	Stainless Steel							
Probe Tip (options)	Nylon, Ruby, Silicon Nitride, Tungsten Carbide							
Gaiter	Fluoroelastomer or Silicon							
Cable	PUR							
Environmental								
Sealing For Probe	IP65 with gaiter or IP50 without gaiter							
Storage Temp (˚C)	-20 to +70							
Operating Temp With Gaiter (˚C)	+5 to +80							
Operating Temp Without Gaiter (˚C)	-10 to +80							

1: Accuracy µm or % reading, whichever is the greater
2: Obtained by repeated operation against a tungsten carbide target

Operating Pressure Gauge (Bar)	
Standard	0.4 – 1.0
Feather Touch	0.3 – 2.0
Jet	0.6 – 2.0

AMETEK®
ULTRA PRECISION TECHNOLOGIES

Solartron Metrology
Precision Driven

Spring Push	LVDT	HB	LVDT	HB	LVDT	HB	LVDT	HB
Axial Cable Outlet : Standard Pneumatic Jet Pneumatic Feather Touch Ultra feather Touch	AX5/2/P AJ5/2/P AT5/2/P -	AX5/2/PH AJ5/2/PH AT5/2/PH -	AX/2.5/P AJ/2.5/P AT/2.5/P -	AX/2.5/PH AJ/2.5/PH AT/2.5/PH	AX/5/P AJ5/P AT/5/P AW/5/P	AX/5/PH AJ/5/PH AT/S/PH AW/5/PH	AX/10/P AJ/10/P AT/10/P -	AX/10/PH AJ/10/PH AT/10/PH -
Radial Cable Outlet : Standard Pneumatic Jet Pneumatic Feather Touch Ultra feather Touch	AXR5/2/P AJR5/2/P ATR5/2/P -	AXR5/2/PH AJR5/2/PH ATR5/2/PH -	AXR/2.5/P AJR/2.5/P ATR/2.5/P -	AXR/2.5/PH AJR/2.5/PH ATR/2.5/PH -	AXR/5/P AJR/5/P ATR/5/P AW/5/P	AXR/5/PH AJR/5/PH ATR/S/PH AW/5/PH	AXR/10/P AJR/10/P ATR/10/P -	AXR/10/PH AJR/10/PH ATR/10/PH -
Measurement Performance								
Measurement Range (mm)	±2		±2.5		±5		±10	
Accuracy (% of reading or µm)	0.5 or 2 µm		0.5 or 2.5 µm		0.5 or 5 µm		0.7 or 10 µm	
Repeatability (µm)	0.15		0.15		0.15		0.25	
Resolution	Dependent on associated electronics							
Pre-Travel (mm)	0.15		0.15		0.15		0.15	
Post-Travel (mm)	0.85		0.85		0.85		0.85	
Tip Force (N) at Middle of range ± 20 % Pneumatic at 0.4 Bar Pneumatic at 1 Bar Pneumatic Jet Pneumatic Feather Touch ±30% at 0.3 Bar Pneumatic Feather Touch ±30% at 0.1 Bar Pneumatic Ultra Feather Touch ± 30% at 0.4 Bar	0.7 2.6 0.85 0.18 1.1 -		0.7 2.6 0.85 0.18 1.1 -		0.7 2.6 0.85 0.18 1.1 0.03-0.05		0.7 2.6 0.85 0.18 1.1 -	
Temperature Coefficient %FS/˚C	0.01		0.01		0.01		0.01	
Electrical Interface								
Energising Voltage	1 to 10 Vrms							
Energising Current (mA/V ± 5%)	2	1	2	1	2	1.2	1	1.2
Sensitivity (mV/V/mm± 5%) Plugged	80	29.4	80	29.4	40	14.7	20	7.35
Sensitivity (mV/V/mm± 5%) Unplugged	150	82	150	82	105	51	33	33
Mechanical								
Body Diameter (mm)	8h6							
Case	Stainless Steel							
Probe Tip (options)	Nylon, Ruby, Silicon Nitride, Tungsten Carbide							
Gaiter (Note 6)	Fluoroelastomer or Silicon							
Cable	PUR							
Environmental								
Sealing For Probe	IP65 with gaiter or IP50 without gaiter							
Storage Temp (˚C)	-20 to +70							
Operating Temp With Gaiter (˚C)	+5 to +80							
Operating Temp Without Gaiter (˚C)	-10 to +80							

1: Accuracy µm or % reading, whichever is the greater
2: Obtained by repeated operation against a tungsten carbide target

Dimensions

Pneumatic Push Axial (AX/P)

	AX/1/P	AX5/1/P	AX/1.5/P	AX/2/P	AX5/2/P	AX/2.5/P	AX/5/P	AX/10/P
A	49.00	84.00	*	*	*	71.00	96.00	127.00
C	2.00	2.00	*	*	*	2.00	2.00	3.00
B1	13.90	25.40	*	*	*	17.40	25.40	44.90
B2	10.90	14.40	*	*	*	11.40	14.40	23.90

* Dimensions available upon request

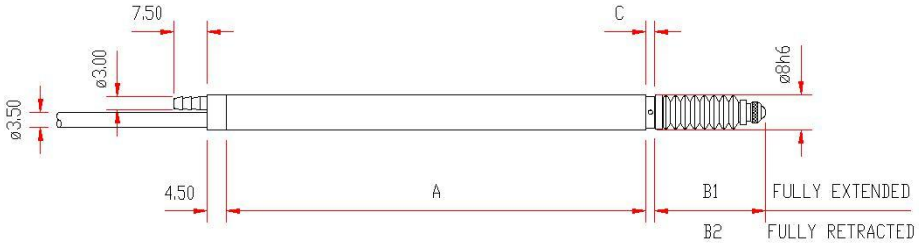

Right Angled Pneumatic Push with 90° Output and non braided cable (AXR/P)

	AXR/1/P	AXR5/1/P	AXR/1.5/P	AXR/2/P	AXR5/2/P	AXR/2.5/P	AXR/5/P	AXR/10/P
A	35.50	*	*	*	*	57.50	82.50	113.50
C	2.00	*	*	*	*	2.00	2.00	3.00
B1	13.90	*	*	*	*	17.40	25.40	33.90
B2	10.90	*	*	*	*	17.40	14.40	12.90

* Dimensions available upon request

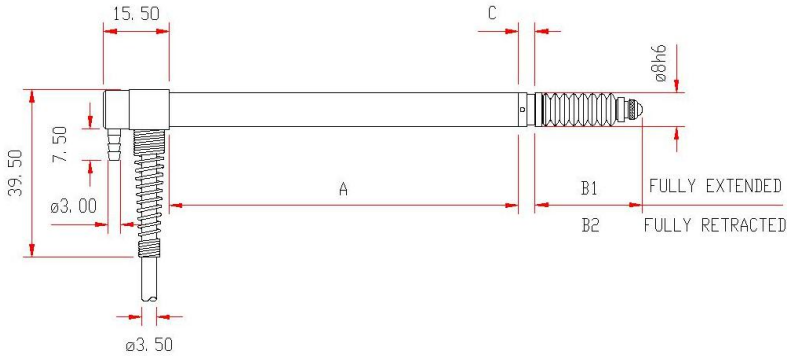

Gaiter Independent Pneumatic Push (AJ/P

	AJ/1/P	AJ5/1/P	AJ/1.5/P	AJ/2/P	AJ5/2/P	AJ/2.5/P	AJ/5/P	AJ/10/P
A	49.0	84.0	*	*	*	71.0	96.0	*
B1	15.4	26.9	*	*	*	18.9	26.9	*
B2	12.4	15.9	*	*	*	12.9	15.9	*
C	7.0	7.0	*	*	*	7.0	7.0	*

* Dimensions available upon request

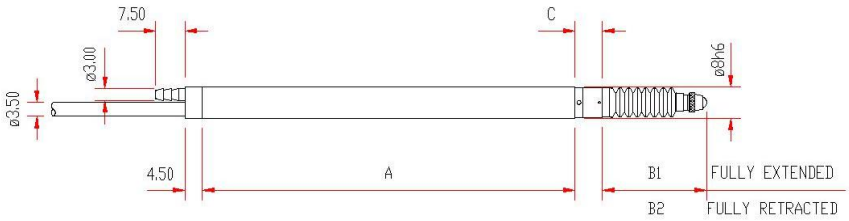

Feather Touch Pneumatic Push (AT/P)

	AT/1/P	AT5/1/P	AT/1.5/P	AT/2/P	AT5/2/P	AT/2.5/P	AT/5/P	AT/10/P
A	49.00	*	*	*	*	71.00	96.00	127.00
C	2.00	*	*	*	*	2.00	2.00	3.00
B1	13.90	*	*	*	*	17.40	25.40	33.90
B2	10.90	*	*	*	*	11.40	11.40	12.90

* Dimensions available upon request

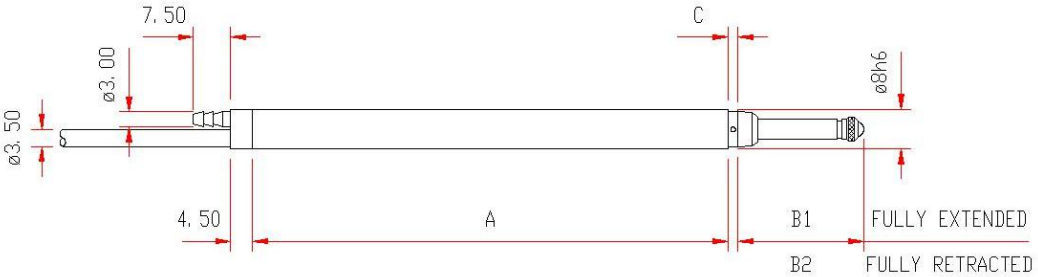

Right Angle Feather Touch Pneumatic Push with 90° output and braided cable (ATR/P)

	ATR/1/P	ATR5/1/P	ATR/1.5/P	ATR/2/P	ATR5/2/P	ATR/2.5/P	ATR/5/P	ATR/10/P
A	35.50	*	*	*	*	57.50	82.50	113.50
C	2.00	*	*	*	*	2.00	2.00	3.00
B1	13.90	*	*	*	*	17.40	25.40	33.90
B2	10.90	*	*	*	*	11.40	14.40	12.90

* Dimensions available upon request

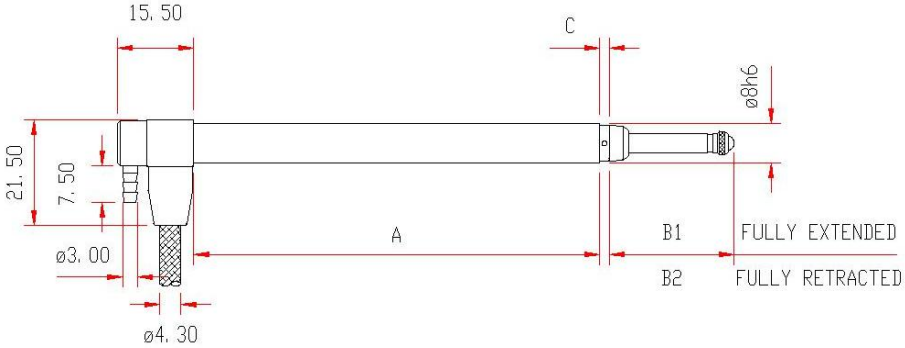

Accessories

Replacement Gaiters

Gaiters can be replaced when damaged. Only pneumatic push probes require gaiter rings.

Spring Push	Part Number	Pneumatic Push	Part Number
A6G/1/S	205014	-	-
AX/1/S	204851	AX/1/P	802691
AX/1.5/S	204851	AX/1.5/P	204894
AX/2.5/S	204894	AX/2.5/P	802692
AX/5/S	204860	AX/5/P	802693
AX5/1/S	204860	AX5/1/S	802693
AX/10/S	205906	AX/10/P	803235

Right Angle Adaptor

For use with spring push gauging probes.
Part Number: 203224

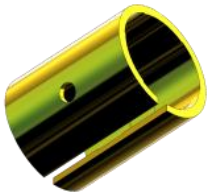

Clamping Collet

For use with all 8 mm clamping shaft sensors. The clamping collet distributes the clamping forces evenly around the shaft. Using the supplied grub screw, the probe can be loosened while holding the collet in place.
Part number: 806966-SX (10mm)
805048-SX (9.5 mm)

Imperial Adaptor Sleeves

Adapter Sleeves can be used to increase the body diameter of 8 mm sensors to 9.512 (3/8"). Available in lengths from 12 to 127 mm.

Imperial Split Adaptor Sleeves

Adapter Sleeves can be used to increase the body diameter of 8 mm sensors to 9.512 (3/8"). Available in lengths from 12 to 127 mm.

Extension Cable

Extension cables for analogue sensors with 5 pin DIN 240° connectors are available for LVDT and Half Bridge types.

AMETEK®
ULTRA PRECISION TECHNOLOGIES

Solartron Metrology
Precision Driven

Block Gauge Family

Universal Gauges

Description

Solartron's family of Block Gauges makes precision measurements of bores and cavities a simple and reliable process. More generally, the use of these devices is recommended in applications where space is limited and where the use of axial probes is not possible. The family of universal gauges includes 2 mm, 5 mm and 10 mm measurement ranges, the 5 mm unit is used in most gauging applications and the 10 mm is designed for applications requiring a longer range. The 2 mm unit is a miniaturised version in length, height and thickness and is recommended for applications where space is very restricted.

The block gauges are available in LVDT, half bridge and offer unrivalled ruggedness, accuracy and repeatability. All three units are extremely versatile and provide datum surfaces and all the adjustments required for precision gauging applications.

Features

- 2 mm, 5 mm and 10 mm total measuring range
- Repeatability <0.25 µm
- Compact size 2 mm unit
- LVDT or half bridge configuration
- Pneumatic or spring actuation
- Adjustable anti-rotation guide
- All stainless steel construction
- Large range of changeable tips
- IP65 protection
- Good linearity over the full measuring range
- High accuracy
- Traceable calibration

Mechanical Outline

Diagrams showing general dimensions and datum surfaces for 2 mm, 5 mm and 10 mm block gauges (Please refer to the technical drawing for the complete set of dimensions)

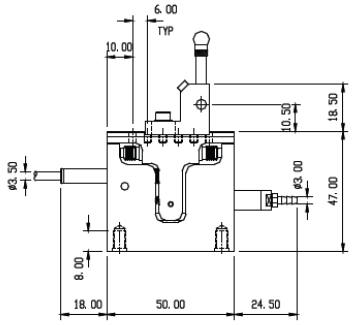

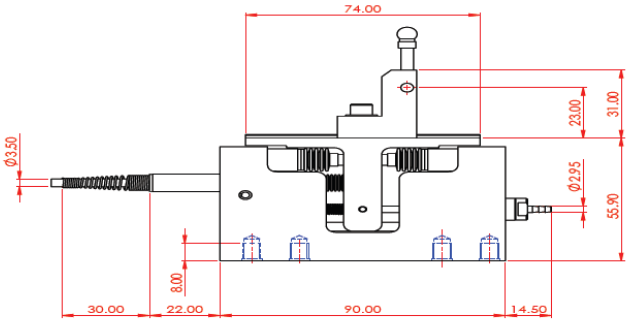

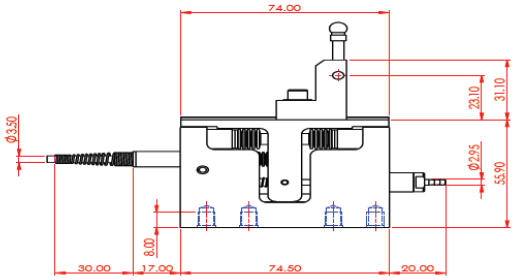

AMETEK®
ULTRA PRECISION TECHNOLOGIES

Solartron Metrology
Precision Driven

	Analogue	
Measurement		
Measurement Range	±1.0, ±2.5 and ±5.0	
Mechanical Travel (mm)	3, 6 and 11	
Accuracy ***1***	At 5 kHz for LVDT at 10 kHz for Half Bridge (Whichever is greater)	
2mm	±1.0 µm or ± 0.5% x D	
5mm	±2.5 µm or ± 0.5% x D	
10mm	±5.0 µm or ± 0.5% x D	
Repeatability (on-axis at 70g tip force) ***2***		
2mm	<0.25 µm	
5mm	<0.25 µm	
10mm	<0. 5µm	
Resolution	Dependant on associated electronics	
Null Position	Adjustable	
Tip Force		
2mm	0.75 N	
5mm	0.75 N	
10mm	0.75 N	
Temperature Coefficient		
2mm	±0.2 µm/°C	
5mm	±0.5 µm/°C	
10mm	±1. 0µm/°C	
Life	Better than 5 million measuring cycles (dependant on application)	
Mechanical		
Mass (less tool holder)		
2mm	160 g (0.232 lbs)	
5mm	390g (0.858 lbs)	
10mm	385 g (0.847 lbs)	
Mass of moving part (less tool holder)		
2mm	35 g (0.077 lbs)	
5mm	90 g (0.198 lbs)	
10mm	95 g (0.209 lbs)	
Materials		
Material	Stainless steel (300 series) with gaiters	
IP Rating	IP65	
Operating Pressure	1 bar to 3 bar	
Environmental		
Storage Temperature (°C)	-40 to +85	
Operating Temperature (°C)	+5 to +85	
Shock	To maintain best performance the Block Gauge should be protected from excessive shock loads and dropping	
Electrical Interface	LVDT	Half bridge
Energising Voltage	1 to 10 V rms	
Energising Frequency	2 to 20 kHz	
Energising Current	2 mA/V at 5 kHz	2 mA/V at 10 kHz
Calibration Voltage	3V	
Calibration Frequency	5 kHz	10 kHz
Calibration Load	10 kΩ	2 kΩ
Sensitivity (mV/V/mm)	At 5 kHz	At 10 kHz
2mm	200 ±0.5%	73.5 ±0.5%
5mm	80 ±0.5%	29.4 ±0.5%
10mm	40 ±0.5%	14.7 ±0.5%

1: Accuracy µm or % reading, whichever is the greater
2: Obtained by repeated operation against a tungsten carbide target

www.solartronmetrology.com • sales.solartronmetrology@ametek.com

AMETEK®
ULTRA PRECISION TECHNOLOGIES

Solartron Metrology
Precision Driven

Block Gauge Accessories

All gauges are supplied configured as spring push. A customer fit pneumatic actuator is required to convert spring push to pneumatic operation. The Block Gauge is inclusive of integral sensor but does not include the pneumatic actuator, additional springs, tool holder, tip carrier or tips. These must be ordered separately.

Tips with industry standard M2.5 thread. Download the PDF file for the tips from www.solartronmetrology.com

Tip Carrier

	4mm dia. Tip Carriers (for use with 4mm Tool Holders)	6mm dia. Tip Carriers (for use with 6mm Tool Holder only)
20 mm Length	208221/20	-
30 mm Length	208221/30	208453/30
40 mm Length	208221/40	208453/40
50 mm Length	-	208453/50

Analogue Block Gauge

LVDT	± 1.0 mm Stroke		± 2.5 mm Stroke		± 5 mm Stroke	
	Product	P/N	Product	P/N	Product	P/N
Standard Plugged	BG/1.0/S	925165	BG/2.5/S	924750	BG/5.0/S	924992
Standard R/A Plugged	-	-	BGR/2.5/S	924886	BGR/5.0/S	924996
Standard Unplugged	BG/1.0/S	925099	BG/2.5/S	924713	BG/5.0/S	924990
Standard R/A Unplugged	-	-	BGR/2.5/S	924884	BGR/5.0/S	924994

Half Bridge	± 1.0 mm Stroke		± 2.5 mm Stroke		± 5 mm Stroke	
	Product	P/N	Product	P/N	Product	P/N
Standard Plugged	BG/1.0/SH	925166	BG/2.5/SH	924751	BG/5.0/SH	924993
Standard R/A Plugged	-	-	BGR/2.5/SH	924887	BGR/5.0/SH	924997
Standard Unplugged	BG/1.0/SH	925100	BG/2.5/SH	924714	BG/5.0/SH	924991
Standard R/A Unplugged	-	-	BGR/2.5/SH	924885	BGR/5.0/SH	924995

Pneumatic Actuator

For 2mm Block Gauge P/N 806313-SX
For 5mm and 10mm Block Gauge P/N 805490-SX

Replacement Springs

	Spring Part Number		
	2 mm Block Gauge	5 mm Block Gauge	10 mm Block Gauge
70 g	208574-070	-	-
75 g	-	208212-075	-
100 g	208574-100	208212-100	-
150 g	208574-150	208212-150	208418-150
200 g	205874-200	-	-
250 g	-	208212-250	208418-250
350 g	-	208212-350	208418-350

AMETEK®
ULTRA PRECISION TECHNOLOGIES

Solartron Metrology
Precision Driven

Flexure Family

Specialist gauges

Description

Very high resolution and gauge R&R at <0.1 µm maintained without degradation over millions of measuring cycles is the hallmark of Solartron analogue gauging flexures.

Analogue flexures are the ideal solution for high precision/high volume post-process or in-process gauging applications, where cycle time is short and high throughput would shorten the life of a conventional pencil probe.

There are no sliding parts to wear out or to cause friction within the frame or sensor, which makes Solartron flexures virtually free from hysteresis.

Flexures can be mounted such that there is little or no stress through the gauge centre line and enabling precision profiling of moving material, such as sheet material or rotating shafts, brake discs etc.

The flexure gauge has forward and reverse spring action with a pneumatically actuated version available for automatic measurements. It is supplied in analogue form for plugging into most standard amplifiers. For improved performance Solartron recommends the Digital Flexure use with the Orbit® Digital Measurement System.

The tool mounting assembly can be variously adjusted along the gauge's length and fixed with M3 bolts. A selection of tips is offered to suit each application. The unique design offers a high degree of factory serviceable parts, providing a low cost repair which in turn reduces the cost of ownership to the end customer.

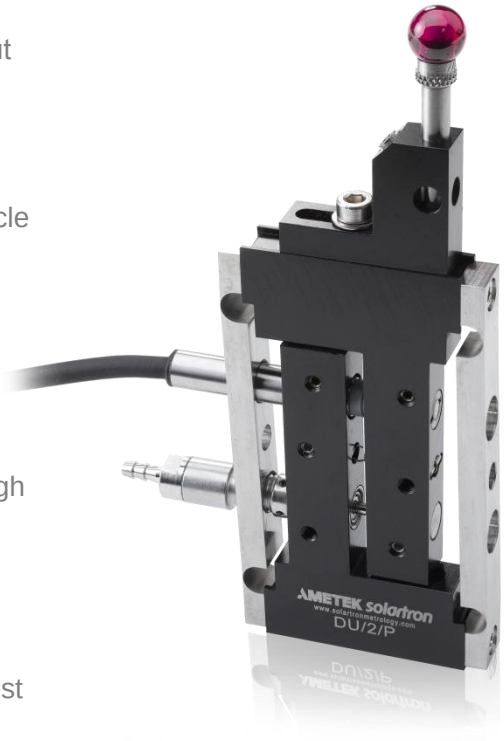

Features

- ±0.5 & ±1.0 mm measuring ranges
- Extended operating life: >20 million cycles
- Excellent repeatability: <0.1 µm
- Excellent resolution
- Half Bridge or LVDT configuration
- Spring push or pneumatic operation
- IP65 protection
- Large selection of contact tips
- 3D drawings available
- High degree of serviceable parts

AMETEK®
ULTRA PRECISION TECHNOLOGIES

Solartron Metrology
Precision Driven

Technical specification

Analogue Flexure		
	AU/0.5	AU/1
Measurement performance		
Mechanical travel	1.7 mm	2.5 mm
Measurement range	1.0 mm	2.0 mm
Repeatability	<0. 1µm	
Resolution	Dependent on associated electronics	
Accuracy % reading	0.1	
Tip force spring push (horizontal attitude ± 20%)	1.5 N at mid position	
Tip force pneumatic (horizontal attitude)	1.0 N at mid position at 2 bar	
Temperature coefficient	<0.01% FS / °C	
Mechanical		
Flexure material	Aluminium and steel	
Mass (including tool holder, 20mm tip holder and ball tip) excluding PIE/Cable	<60g	<70g
Mass of tool holder and screw	6g	
Gaiter material	High grade polymer	
Cable type and length	2m PUR	
Operating life (dependant on application)	>20 million cycles	
Pneumatic operating pressure	1.5 bar to 2.5 bar relative	
Environmental		
IP rating	IP65 (flexure only)	
Operating temperature, flexure only	+5 to +85 °C	
Operating temperature, flexure and electronics	+5 to +65 °C	
Electrical Interface		
	LVDT	**Half Bridge**
Energising voltage	1 to 10 Vrms	
Energising frequency	2 to 20 kHz	
Energising current	3 mA/V at 5 kHz	1.5 m/A/V at 10 kHz
Calibration load	5 kΩ	2 kΩ
Standard calibration parameter	200 m/V/V/mm ±0.5% at 5 kHz, 3 V rms	73.5 mV/V/mm ±0.5% at 10 kHz, 3 V rms

Zonal Repeatability

For optimal gauging performance the recommended operation is on centre. The specification is valid when using Solartron standard tool holder, tip holder and tip.
(Tip used is 6.35 mm TC Ball Tip)

Repeatability	AU/0/5 and AU/1
On centre	<0.1 µm
Off centre	<0.5 µm

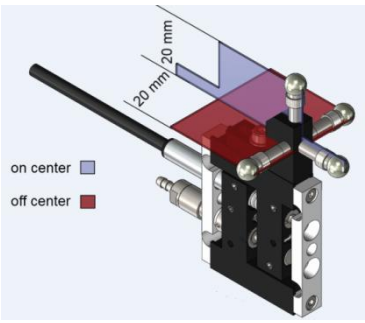

Dimensions

Analogue Flexure
AU/0.5

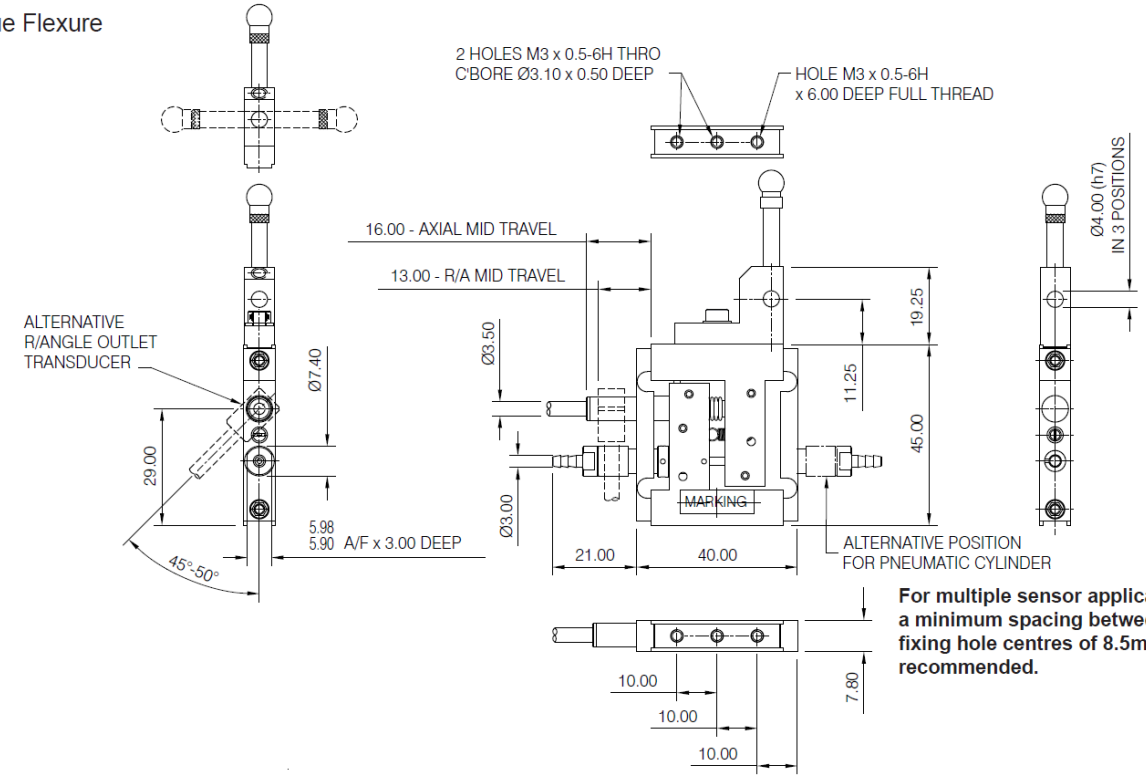

For multiple sensor applications a minimum spacing between fixing hole centres of 8.5mm is recommended.

Analogue Flexure
AU/1

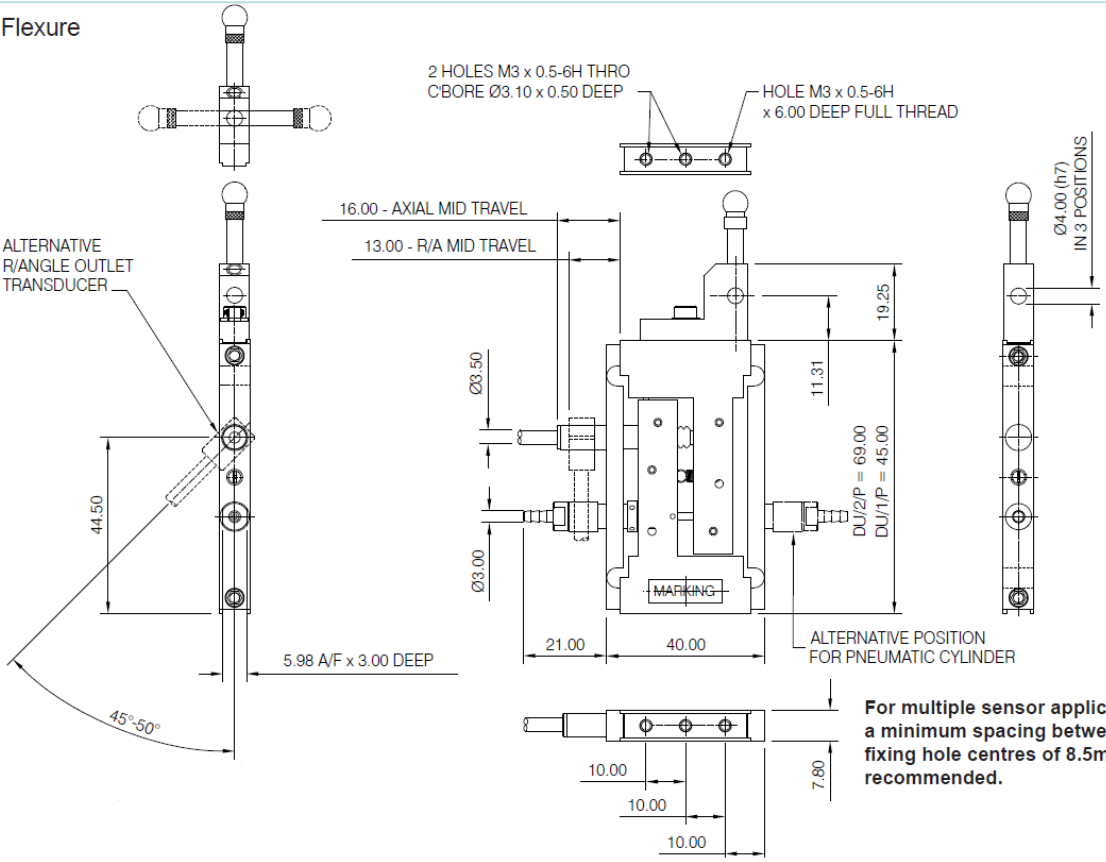

For multiple sensor applications a minimum spacing between fixing hole centres of 8.5mm is recommended.

Analogue Flexure: Components

The gauge is supplied inclusive of sensor but does not include the tool holder, tip carrier or tips. There are versions for spring push and pneumatic push with axial and radial cable exit. Solartron supplies flexures calibrated to suit your non-Solartron electronics. Please contact your nearest Solartron representative for details.

Accessories are common to both AU/0.5 and AU/1 versions.

Tips
With industry standard M2.5 thread.
See www.solartronmetrology.com for a list of available tips

Tip holders
20 mm length Part number 208221/20
30 mm length Part number 228221/30
40 mm length Part number 228221/40

Tool holder
Part number 806274

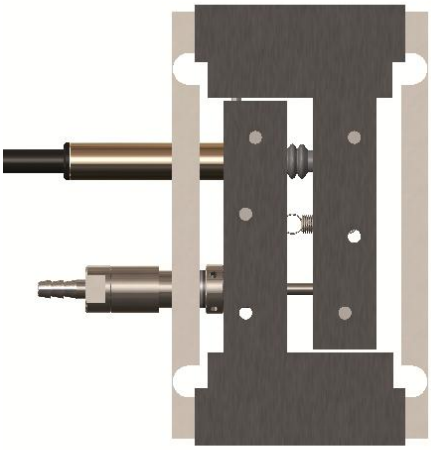

Product Type	AU/0.5		AU/1	
	LVDT	Half bridge	LVDT	Half bridge
Axial Cable Outlet	± 0.5 mm		± 1.0 mm	
Forward Spring	AU/0.5/S	AU/0.5/SH	AU/1.0/S	AU/1.0/SH
Reverse Spring	AU/0.5/R	AU/0.5/RH	AU/1.0/R	AU/1.0/RH
Reverse Spring Pneumatic	AU/0.5/P	AU/0.5/PH	AU/1.0/P	AU/1.0/PH
Radial Cable Outlet				
Forward Spring	AUR/0.5/S	AUR/0.5/SH	AUR/1.0/S	AUR/1.0/SH
Reverse Spring	AUR/0.5/R	AUR/0.5/RH	AUR/1.0/R	AUR/1.0/RH
Reverse Spring Pneumatic	AUR/0.5/P	AUR/0.5/PH	AUR/1.0/P	AUR/1.0/PH

AMETEK®
ULTRA PRECISION TECHNOLOGIES

Solartron Metrology
Precision Driven

Single Leaf Flexure

Due to the flexible design of the Single Leaf Flexure, users can fit extension arms to increase the reach and versatility of the transducer; typical applications are shim selection or measuring a feature inside a recess. The flexure may be mounted so that little stress is applied through the gauge centre line, thus enabling precision profiling of moving materials such as sheet material, brake disks or rotating shafts.

Technical Specification	
	AUS/0.25/S
Single Leaf Flexure Element	
Frame width (mm)	6
Coil configuration	LVDT
Measurement range (mm)	±0.25
Outward travel from mid range	290/270 µm1
Inward travel from mid range	300/350 µm1
Linearity (% of FRO)	0.3
Repeatability (µm)	0.15[1]
Sensitivity	196 mV/V/m +5% at 7.5 KHz / I MΩ Load
Energising current	2.2 mA/V @ 7.5 KHz
Tip force @ mid range	1.25 N[1]
Environmental protection	IP65
Life (dependant on application)	20 million cycles typ.
Temperature range (°C)	
Storage	-20 to +70
Probe operating	+5 to +65
PIE / T-con operating	0 to 60
Materials	
Body	Steel
Gaiter	High grade polymer
Cable	2 m PUR

[1] based on 50 mm built-in arm (see drawing). Varies with different arm extensions and tips

Dimensions

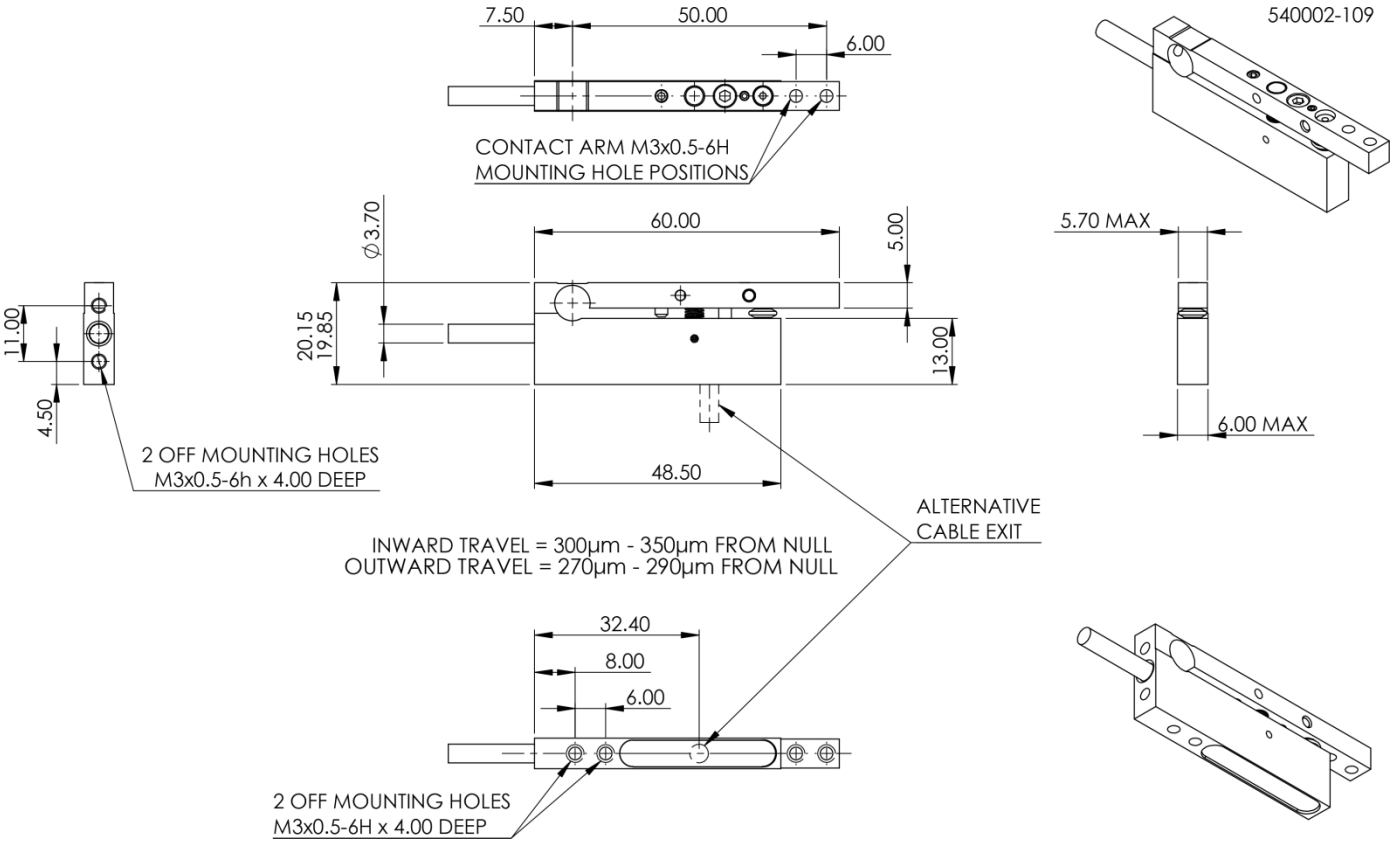
7.50
50.00
6.00
CONTACT ARM M3x0.5-6H
MOUNTING HOLE POSITIONS
540002-109
Ø3.70
60.00
5.00
5.70 MAX
11.00
20.15
19.85
13.00
4.50
6.00 MAX
2 OFF MOUNTING HOLES
M3x0.5-6h x 4.00 DEEP
48.50
ALTERNATIVE
CABLE EXIT
INWARD TRAVEL = 300µm - 350µm FROM NULL
OUTWARD TRAVEL = 270µm - 290µm FROM NULL
32.40
8.00
6.00
2 OFF MOUNTING HOLES
M3x0.5-6H x 4.00 DEEP

AMETEK®
ULTRA PRECISION TECHNOLOGIES

Solartron Metrology
Precision Driven

Mini Probe

Low profile transducer

Description

The Mini Probe is a compact, low profile transducer that is ideal for measurement in confined spaces, such as bores. The transducer is based on a parallel spring structure that ensures it provides excellent repeatability over a long working life, even when rotated in bores that have key slots of lubrication ports.

A Tungsten Carbide contact tip is fitted as standard but a selection of customer replaceable tips with an M2 thread is available for special applications.

Features

- +/-0.25 and +/- 0.5 mm measuring range
- Excellent repeatability in both planes of operation
- Strong frame enables rotation in bores with key slots
- Changeable contact tips
- IP65 protection
- Compact size
- Simple installation

Repeatability depends on the alignment of the mini probe whether on axis or cross axis as shown below.

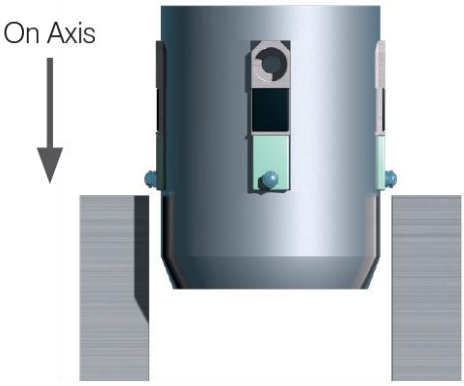

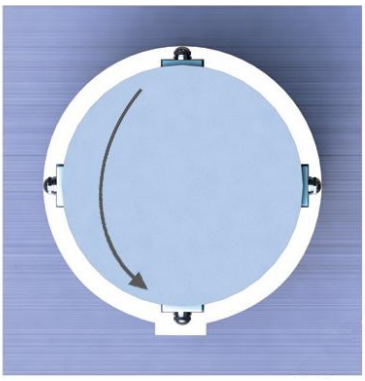

Cross Axis

AMETEK®
ULTRA PRECISION TECHNOLOGIES

Solartron Metrology

Product				
Flexure Body Width (mm)	8		8	
Inductive Sensor Configuration	LVDT	HB	LVDT	HB
Spring Axial Cable Outlet	AU/0.5/S	AU/0.5/SH	AU/1/S	AU/1/SH
Spring Radial Cable Outlet	AUR/0.5/S	AUR/0.5/SH	AUR/1/S	AUR/1/SH
Pneumatic Axial Cable Outlet	AU/0.5/P	AU/0.5/PH	AU/1/P	AU/1/PH
Pneumatic Radial Cable Outlet	AUR/0.5/P	AUR/0.5/PH	AUR/1/P	AUR/1/PH
Measurement Performance				
Measurement Range (mm)	±0.5		±1	
Accuracy (% of Reading) or µm (Note 1)	0.5 or 0.5 µm		0.5 or 1 µm	
Linearity (%FSO)				
Repeatability (µm) (Note 2) and (Note 3)	<0.1		<0.1	
Resolution	Note 4		Note 4	
Pre Travel (mm)	0.15		0.15	
Post Travel (mm)	0.85		0.85	
Tip Force (N) at Middle of Range (Horizontal Attitude ±20%) - Spring Push	0.75		0.75	
Tip Force (N) at Middle of Range (Horizontal Attitude ±20%) - Pneumatic @ 2 bar	1		1	
Temperature Coefficient (µm/ºC)	0.5		1	
Electrical Interface				
Plugged Sensitivity (mV/V/mm ±5%)	200	73.5	200	73.5
Energising Current (mA/V ±5%)	2.2	1.2	1.8	1
Un plugged Sensitivity (mV/V/mm ±5%)	262	82	210	83
Excitation Voltage (Vrms) (Note 5)	1-10	1-10	1-10	1-10
Excitation Frequency (kHz) (Note 5)	2-20	2-20	2-20	2-20
Environmental				
Sealing	IP65			
Storage Temperature (ºC)	-20 to +80			
Operating Temperature (ºC)	+5 to +80			
Shock	Do not subject the Flexure to excessive shocks			
Material				
Flexure Gauge Body	Aluminium and Steel			
Probe Tip (options)	Nylon, Ruby, Silicon Nitride, Tungsten Carbide			
Gaiter	Fluoroelastomer or Silicon			
Cable	PUR			
Mass including Tool holder, 20mm tip holder and std ball tip	<50 g		<70 g	

Note 1: Accuracy µm or % reading whichever is the greater
Note 2: On Axis 70 g Tip Force with 25 mm tip holder
Note 3: Repeated operation against a carbide target standard deviation from average (68%)
Note 4: Depends on the conditioning electronics
Note 5: Calibration for LVDT products 3 Vrms and 5 kHz, Half Bridge 3 Vrms and 10 kHz

www.solartronmetrology.com • sales.solartronmetrology@ametek.com

AMETEK®
ULTRA PRECISION TECHNOLOGIES

Solartron Metrology
Precision Driven

Analogue Mini Probes: Dimensions

AU/0.25/S

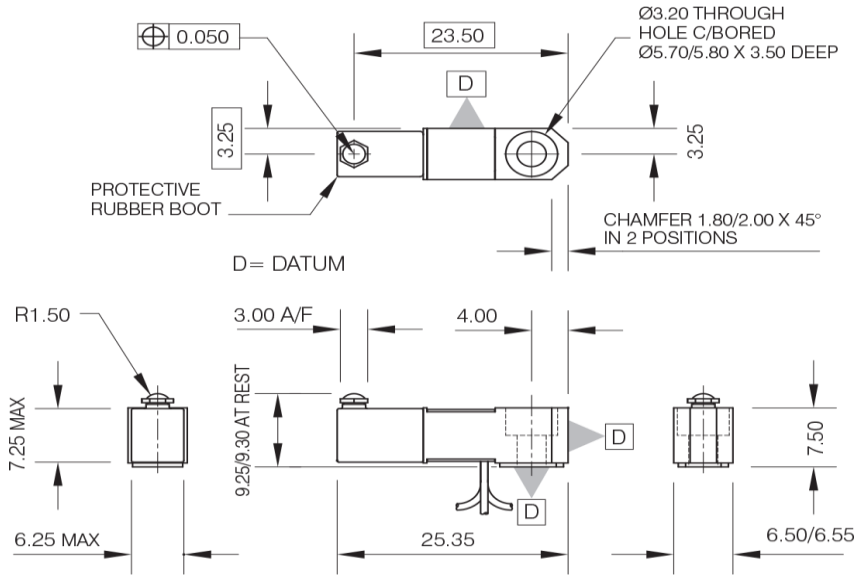

AU/0.5/S

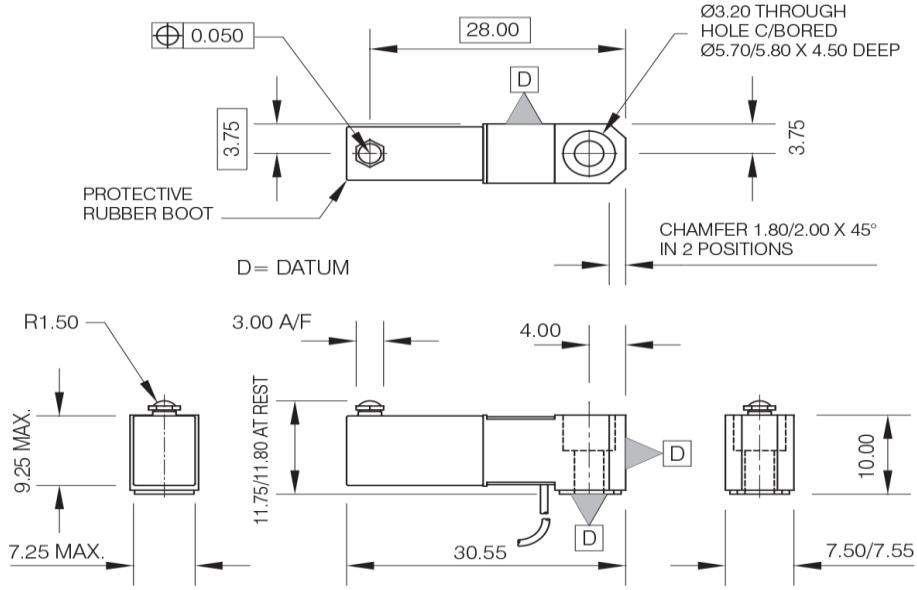

All dimensions are nominal only for accurate drawings download the correct Sales Application Drawing from the Solartron Metrology Website

www.solartronmetrology.com • sales.solartronmetrology@ametek.com

AMETEK®
ULTRA PRECISION TECHNOLOGIES

Solartron Metrology
Precision Driven

Analogue Electronics

OD Series

The OD series of conditioning units is used to interface with Solartron's sensors to provide different functionality to suit different applications.

The OD2 is a two wire 4-20 mA signal conditioner. It is designed for long distance signal transmission due to low noise susceptibility. A cable break results in no current flow indicating a fault.

The OD4 (OD5 is a mains powered equivalent) is a signal conditioning unit powered from a single 10-30 VDC supply. The outputs are fully adjustable allowing a range of voltage and current outputs to be selected.

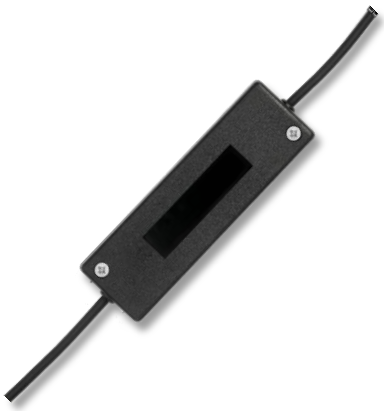

DRC DIN Rail Module

The DRC is a DIN rail mounted version of the OD4 (see above).

BICM in line module

The BICM provides a simple low-cost in-line conditioning unit. This is designed for use where the sensor is in a harsh environment as the BICM can be connected up to 10 m from the sensor. An IP67 variant of the BICM is also available.

ATM TLL converter

TTL RS232 Differential Quadrature is one of the most commonly used methods of communication between Linear Displacement Sensors and Control or Data Acquisition Systems. Its simplicity of interfacing with programmable systems also makes Solartron's ATM one of the most cost effective.

AMETEK®
ULTRA PRECISION TECHNOLOGIES

Solartron Metrology
Precision Driven

	OD2	OD4	OD5	DRC	BICM	
Power Requirement						
Input Voltage VDC	13-42	10-30	N/A	10-30V	±15	24
Input Voltage VAC	N/A	N/A	90-264	N/A	N/A	N/A
Input Current (mA)	<30	140 at 10V 50 at 30V	250	160 at 10V 70 at 30V	±12	24
Frequency (Hz)	N/A	N/A	47-63	N/A	N/A	N/A
Transducer Interface						
Primary voltage (Vrms)	0-9		3		1.2 – 21	
Primary frequency (kHz)	5 or 13	2.5 or 5		5,10 or 13	2.5 to 20	
Input Range	30-530mV/V[1]	55 to 5000mV			up to 3.5	
Input Load (kΩ)	2	2, 10, 100		2, 100	100	
Options	Forward and reverse			see note 2		
Output						
Voltage Output VDC			Up to ±10			
Current Output mA	4-20	Up to ±20 into 150Ω load				
Output Ripple	<38µA rms		<1 mV rms		<14 mV rms	
Output Offset	Up to 100% on maximum gain (coarse and fine adjustment)					
Temperature Coefficient Gain (%FSO/°C)			<0.01		<0.03	
Temperature Coefficient Offset (%FSO/°C)			<0.01		<0.02	
Warm Up (minutes)	15 minutes					
Linearity (%FSO)	<0.02				<0.1	
Bandwidth (-3dB) (Hz)	25			500Hz, 1khz		
Environmental (Note 3)						
Storage Temperature	-40 to +80		-20 to +80		-20 to +80	
Operating Temperature	0 to +60					
IP rating	65	40	40	None	40/67	40
Mechanical						
Transducer Connections	Terminals	Din Connector		Terminals	Solder tag or factory fit for IP67	
Power connections	Terminals	IEC320 C14				
Weight						
Material	ABS	Painted Aluminium Box		Plastic	Plastic or	
Mounting	Holes			DIN rail	In line	

Note 1: For transducers with sensitivity > 250mV/V, an adjustable attenuator is required- contact sales
Note 2; Transducer is connected via external screw terminal user can therefore configure options
Note 3: For higher environmental levels(and other custom options) contact sales office

Measurement	**ATM TTL Converter**
Transducer types	All Solartron Displacement Transducers
Accuracy (%FSO)	<0.25
Resolution (x4 interpolation)	0.1
Repeatability	transducer dependent

Electrical	
Power	+5 ±0.25 VDC @ 100 mA
Output Signal	A and B, /A and /B TTL square waves RS422 levels
Output frequency (kHz)	50, 100, 125, 250, & 500 (factory selectable)
Bandwidth	100 Hz

Environmental (electronics)	
Sealing	IP43
Operating temperature (°C)	0 to +60
Storage temperature (°C)	-20 to +70

Refer to product manual 502724 for details of operation – contact sales office/web site

For 3D drawings, please contact sales.solartronmetrology@ametek.co.uk

United Kingdom - Head Office
Solartron Metrology
Steyning Way
Bognor Regis
West Sussex
PO22 9ST
Tel: +44 (0) 1243 833333
Fax: +44 (0) 1243 833322
Sales.solartronmetrology@ametek.com

France
Solartron Metrology
Rond-point de l'Espine des Champs
Buroplus - Bat. D
Elancourt 78990
Tel: +33 (0)1 30 68 89 50
Fax: +33 (0)1 30 68 89 59
france.solartronmetrology@ametek.com

Germany
Ametek GmbH
Solartron Metrology Division
Rudolf-Diesel-Strasse 16
40670 Meerbusch
Tel: +49 (0) 2159 9136 500
Fax: +49 (0) 2159 9136 505
vertrieb.solartron@ametek.de

Brazil
Ametek do Brasil, Ltda
Rod. Eng Ermenio de Oliveira Penteado, Km 57, SP75
Bairro Tombadouro
13337-300, Indaiatuba, SP, Brazil
Tel: +55 19 2107 4126

India
Ametek Instruments India Private Limited
1st Floor, Left Wing
Prestige Featherlite Tech Park
Plot #148, EPIP II Phase
Whitefield, Bengaluru 560 066
Karnataka, India
Tel: +91 80 6782 3200
Fax: +91 80 6782 3232

USA
Solartron Metrology
USA Central Sales Office
915 N.New Hope Road, Suite C
Gastonia, NC 28054
Tel: +1 800 873 5838
Fax: +1 704 868 8466
usasales.solartronmetrology@ametek.com

China
AMETEK Commercial Enterprise (Shanghai) Co. Ltd
No. 155 Puhui Road
Ju Ting Economic Development Zone
Shanghai 200131, China
Tel: +86 21 5763 2509
Fax: +86 21 5866 0969 Ext. 261/262
china.solartronmetrology@ametek.com

Solartron Metrology
Precision Driven

Offices worldwide
Agent and distributor details available at
www.solartronmetrology.com

Q09540

AMETEK®
ULTRA PRECISION TECHNOLOGIES

Precision. Quality. Reliability

www.solartronmetrology.com • sales.solartronmetrology@ametek.com